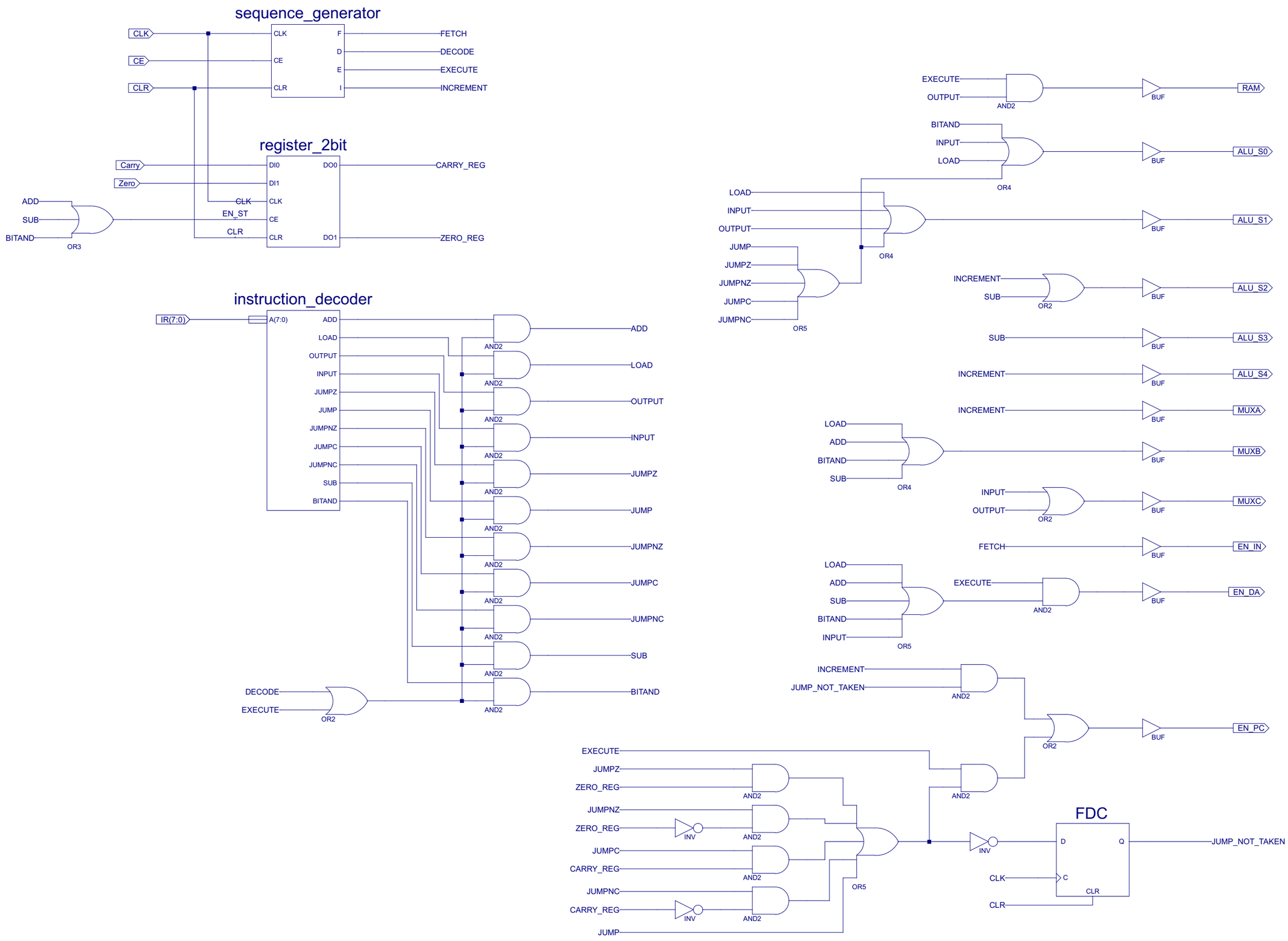
sequence_generator
CLK
CE
CLR
CLK
CE
CLR
F
D
E
I
FETCH
DECODE
EXECUTE
INCREMENT
register_2bit
Carry
Zero
DI0
DI1
CLK
CE
CLR
DO0
DO1
CARRY_REG
ZERO_REG
ADD
SUB
BITAND
OR3
instruction_decoder
IR(7:0)
A(7:0)
ADD
LOAD
OUTPUT
INPUT
JUMPZ
JUMP
JUMPNZ
JUMPC
JUMPNC
SUB
BITAND
AND2
DECODE
EXECUTE
OR2
EXECUTE
OUTPUT
AND2
BUF
RAM
BITAND
INPUT
LOAD
OR4
ALU_S0
LOAD
INPUT
OUTPUT
JUMP
JUMPZ
JUMPNZ
JUMPC
JUMPNC
OR5
ALU_S1
INCREMENT
SUB
OR2
ALU_S2
SUB
ALU_S3
INCREMENT
ALU_S4
INCREMENT
MUXA
LOAD
ADD
BITAND
SUB
MUXB
INPUT
OUTPUT
MUXC
FETCH
EN_IN
LOAD
ADD
SUB
BITAND
INPUT
EXECUTE
EN_DA
INCREMENT
JUMP_NOT_TAKEN
EN_PC
EXECUTE
JUMPZ
ZERO_REG
JUMPNZ
ZERO_REG
INV
JUMPC
CARRY_REG
JUMPNC
CARRY_REG
INV
JUMP
OR5
INV
FDC
D
Q
C
CLR
CLK
CLR
JUMP_NOT_TAKEN